Reg. No. [ ][ ][ ][ ][ ][ ][ ][ ][ ][ ] [14EE44]

FOURTH SEMESTER B.TECH. EXAMINATION, JUNE – 2016

CONTROL SYSTEMS

Time: 3 Hours **Maximum Marks: 70**

Instructions:

1. Answer any **FIVE** full Questions. Choosing Atleast two full questions from Part-A and Part-B.
2. Missing data may be suitably assumed.

PART-A

1. a. With suitable examples, explain the merits and demerits of closed loop system. **07**

b. For the mechanical system shown in fig (1b) **07**

i. Draw mechanical network

ii. From mechanical network diagram, write differential equations of performance.

Draw the electrical F-V analogous circuit shown in Fig.1.(b)

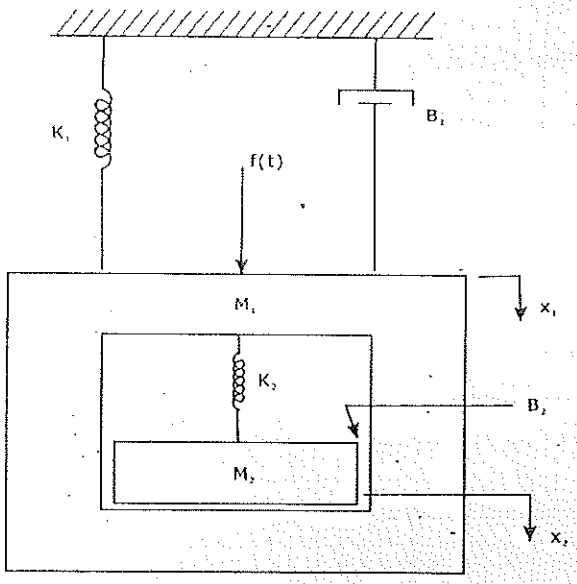

Fig. 1(b)

2. a. For the block diagram shown in fig (2a) obtain C(s)/ R(s) transfer function. **07**

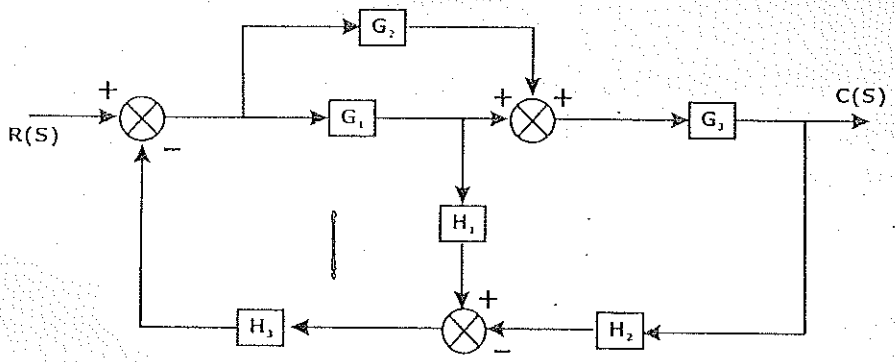

Fig. 2(a)

b. Using Mason gain formula find the transfer function C(S)/R(S) for the signal flow graph shown in fig (2b) **07**

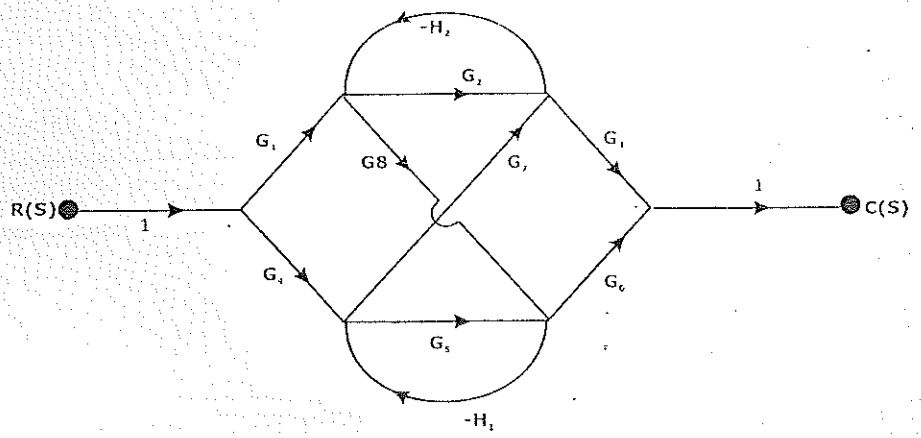

Fig. 2(b)

3. a. Obtain the unit step response for 2nd order under damped system. **07**

b. A unity FBCS is characterized by open loop transfer function $G(S)H(S) = \dfrac{K}{S(S+10)}$. Determine the system gain K, so that the system will have the damping ratio of 0.5, for this value of K find

i. t_r

ii. t_P

iii. t_S

iv. M_P, assuming that the system is subjected to a step input

4. a. For the negative feedback control system shown in fig 4(a), find the stability of the system using RH criteria. Find the value of K that will cause sustained oscillations for the system as a function of K. **08**

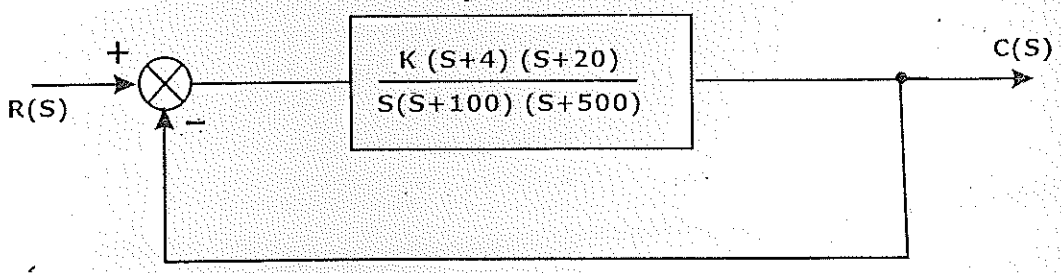

Fig. 4(a)

b. For the given transfer function illustrate two methods of overcoming the difficulty in estimating the stability of the system **06**

TF is $s^5+s^4+2s^3+3s+5=0$

PART-B

5. a. The characteristic equation of a certain feedback control system is given by $s^4+3s^3+12s^2+(K-16)\,s+k=0$. Sketch the root locus plot for $0<K<\infty$ and show that the system is conditionally stable. **08**

b. Show that the root locus for a control system with an open loop transfer function $G(S)H(S)=\frac{K(S^2+6s+10)}{S^2+2S+10}$ is an arc of a circle with the center at the origin and radius is $\sqrt{10}$. **06**

6. a. State and explain Nyquist stability criteria. **06**

b. Sketch the Nyquist plot for $GH(S)=\frac{K}{S(S+1)(S+2)}$, then find the range of K for closed loop stability. **08**

7. a. For a 2nd order system shown in Fig7(a) derive the frequency domain specifications resonant peak and resonant frequency. **06**

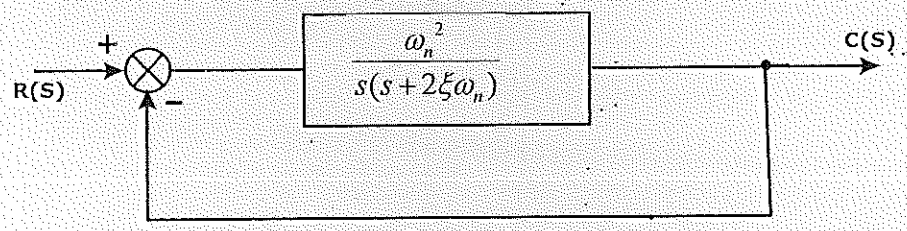

Fig. 7(a)

b. Draw the Bode plot for $G(s)H(s)=\frac{K}{S(S+1)(S+10)}$, then find the range of K for closed loop stability. **08**

8. a. Explain the state model to develop the state variable equations. **06**

b. Determine the state variable model for the circuit shown in Fig(8b) given $R_1=1\Omega$, $R_2=2\Omega$, $R_3=3\Omega$, $L=\frac{1}{6}H$ & $C=\frac{1}{3}F$ **08**

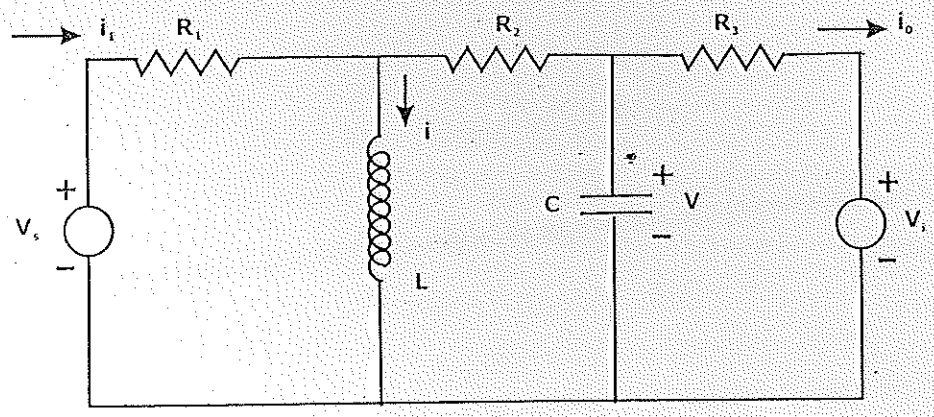

Fig. 8(b)